Assembly Instructions

ITEM NO. D3832-42-CTR

HUDSON 42" ROUND COUNTER TABLE
& 4 CHAIR SET

Thank you for purchasing this quality product. Be sure to check all packing materials carefully for small parts, which may have come loose inside the carton during shipment. Identify and count all items and compare with the PARTS LIST and/or HARDWARE LIST shown below.

STOP Please read the instructions thoroughly before assembly.

1. We recommend that you assemble this product with the assistance of another person; this will make the assembly easier, and will help eliminate damage to the product or injury to persons during assembly.
2. Please do not tighten screws or bolts until the assembly is completed.
3. To level the chairs or table, before tightening all the screws, the chairs or table must be place on a flat surface and then tighten the screws.
4. Please put all parts on a non-abrasive floor before assembly and follow the assembly steps to assemble your newly purchased product correctly and efficiently.

PARTS LIST

NO.	COMPONENT	SKETCH	QTY.
A	CHAIR BACK	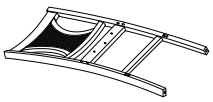	4 PCS
B	CUSHION SEAT	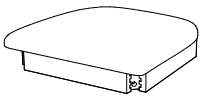	4 PCS
C1	FRONT LEG (RIGHT)	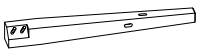	4 PCS
C2	FRONT LEG (LEFT)		4 PCS
D1	SIDE STRETCHER (RIGHT)		4 PCS
D2	SIDE STRETCHER (LEFT)		4 PCS
E	FRONT STRETCHER		4 PCS

HARDWARE LIST

NO.	COMPONENT	SKETCH	QTY.
1	FLAT WASHER 5/16” DIA.		44 PCS
2	SPRING WASHER 5/16” DIA.		44 PCS
3	NUT 5/16” DIA.		16 PCS
4	ALLEN WRENCH 5/16” DIA.	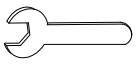	1 PC
5	SHORT BOLT 1/4” x 1 3/4”	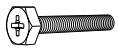	12 PCS
6	LONG BOLT 1/4” x 3”		16 PCS
7	WOOD SCREW #8 x 1 1/2”		24 PCS

MADE IN VIETNAM

Assembly Instructions

ITEM NO. D3832-42-CTR

HUDSON 42" ROUND COUNTER TABLE
& 4 CHAIR SET

To assemble the chairs, please follow the following steps and repeat for each chair:

STEP 1
Lay the chair back on soft clean surface and install the cushion seat.

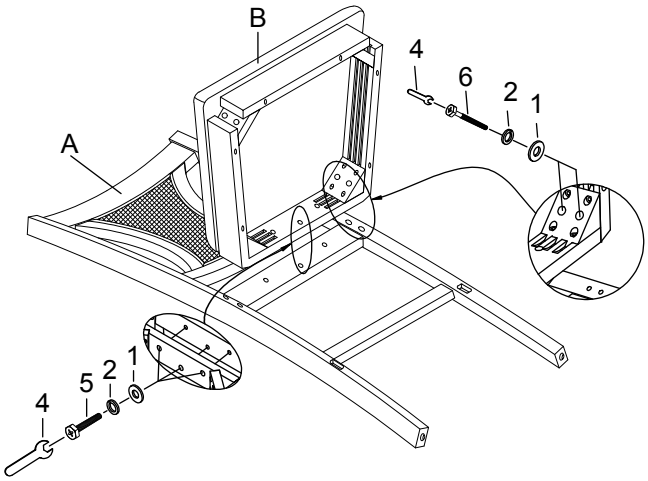

STEP 2
Insert side stretchers with wood screws.

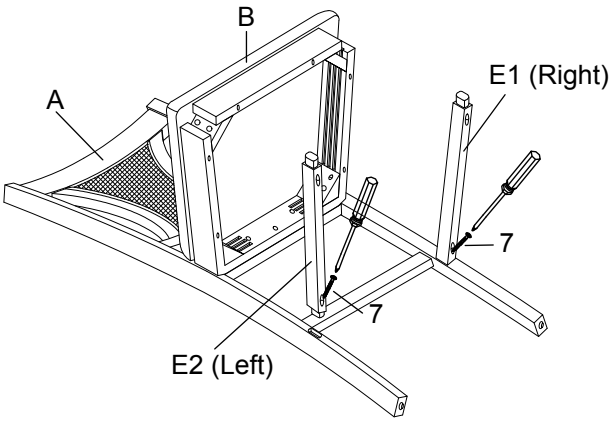

STEP 3
Install front stretcher into the holes of the front legs then attached to the cushion seat.

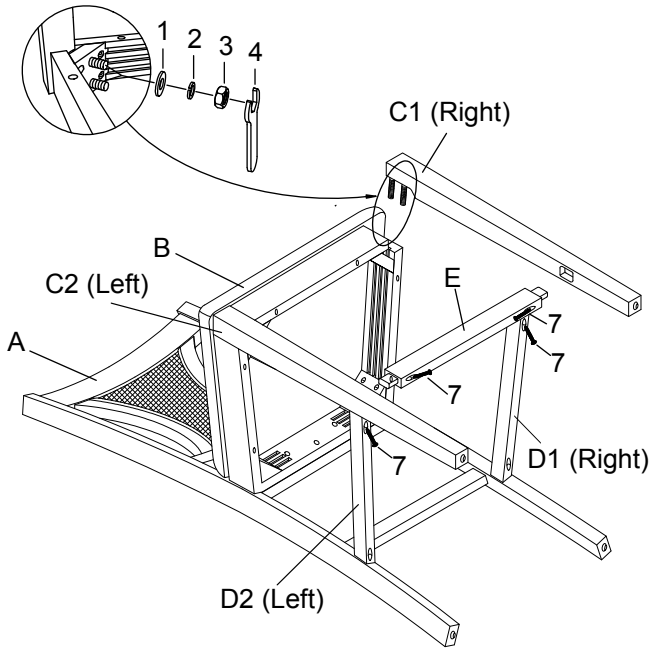

STEP 4
Complete..

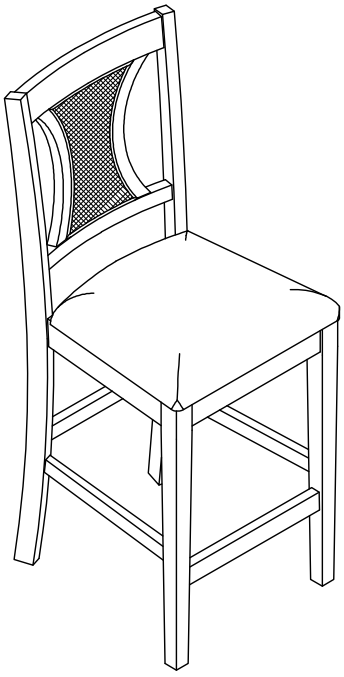

Assembly Instructions

ITEM NO. D3832-42-CTR

HUDSON 42" ROUND COUNTER TABLE
& 4 CHAIR SET

PARTS LIST

NO.	COMPONENT	SKETCH	QTY.
A	TABLE TOP	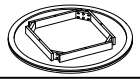	1 PC
B	TABLE LEG		4 PCS

HARDWARE LIST

NO.	COMPONENT	SKETCH	QTY.
1	FLAT WASHER 5/16” DIA.		8 PCS
2	SPRING WASHER 5/16” DIA.		8 PCS
3	BOLT 5/16” x 65 MM		8 PCS
4	ALLEN KEY 4 MM		1 PC

To assemble the table, please follow the following steps:
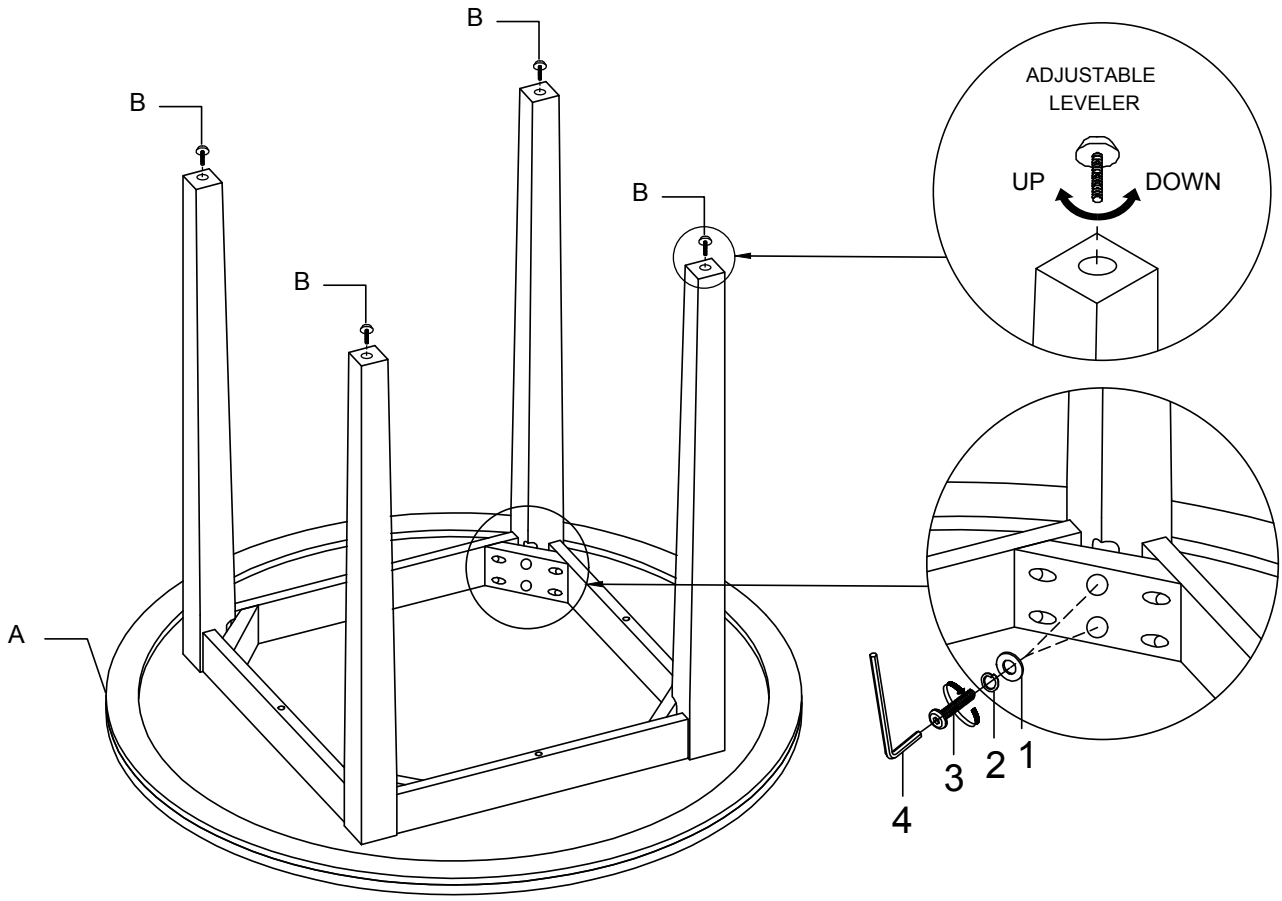
STEP 1: Install 4 of the table legs and tighten all bolts.