ASSEMBLY INSTRUCTIONS

Thank you for purcahsing this quality product. Be sure to check all packing materials carefully for small parts,which may have come loose inside the cartoon during shipment. Identify and count all items and compare with the part list and hardware list shown.

ITEM #	DESCRIPTION
B135-050	Campbell Dresser
B135-060	Campbell Mirror

No	Parts & Hardware	Qty
A	Mirror	1 Pc
B	Dresser	1 Pc
C	Mirror Support	2 Pcs
D	Dresser Support	1 Pc
E	PHCB Screw M4 x 32mm	8 Pcs

STEP 1

Attach mirror support (C) to the mirror back (A) as step 1, then tighten with PHBC Screw (E). Make sure the marking line on mirror support is at the same level as the bottom of mirror.

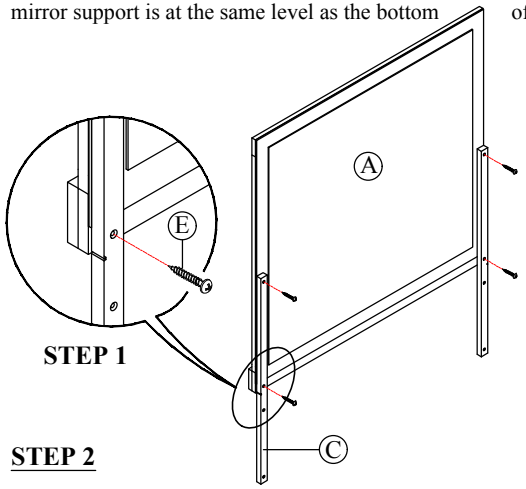

STEP 2

Place the mirror with support on the top of dresser (B).
Then *align center* as shown and tighten with PHBC Screw (E).

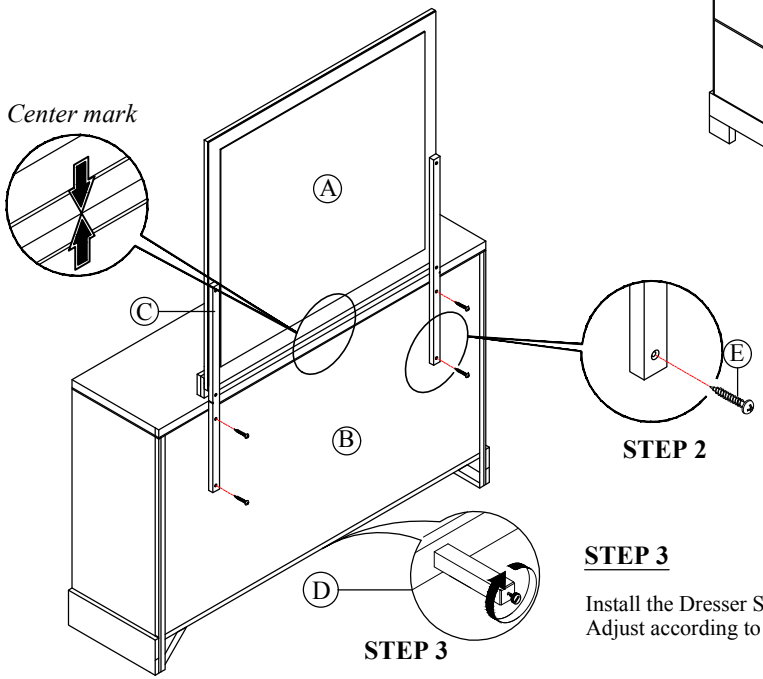

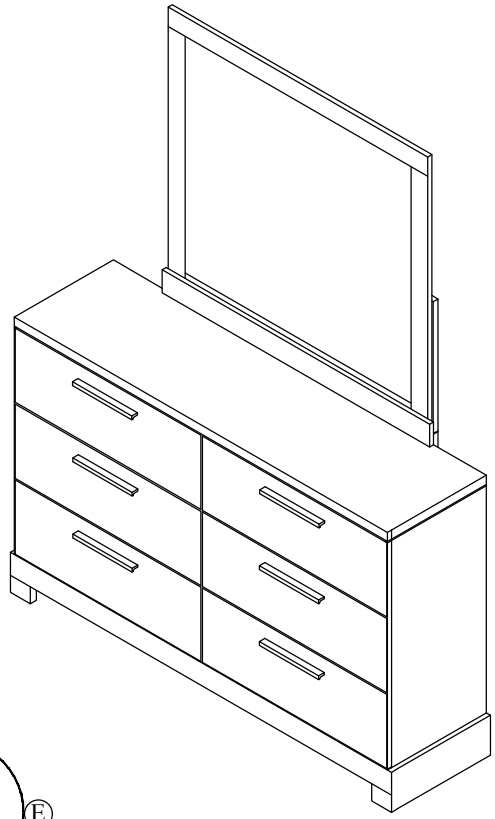

STEP 3

Install the Dresser Support (D) to the product.
Adjust according to the ground level.